computar

M3514-MP

f=35mm F1.4
for 2/3 type Megapixel Cameras
C-Mount

Model No.		M3514-MP		Effective Lens Aperture	Front	φ24mm	
Focal Length		35mm			Rear	φ12mm	
Max. Aperture Ratio		1:1.4		Distortion	2/3 type	-0.8%(y=5.5)	
Max. Image Format		8.8mm x 6.6mm(φ11mm)			1/2 type	-0.39%(y=4.0)	
Operation Range	Iris	F1.4 - F16C		Back Focal Length		17.1mm	
	Focus	0.3m - Inf.		Flange Back Length		17.526mm	
Control	Iris	Manual		Mount		C-Mount	
	Focus	Manual		Filter Size		M30.5 P=0.5mm	
Object Dimension at M.O.D	2/3 type	8.1cm x 6cm		Dimensions		φ33.5mm x 38.2mm	
	1/2 type	5.9cm x 4.4cm		Weight		87g	
	1/3 type	4.4cm x 3.3cm					
Angle of View	D	2/3 type	17.3°	1/2 type	12.6°	1/3 type	9.5°
	H		13.9°		10.1°		7.6°
	V		10.4 °		7.6°		5.7°
Operating Temperature		-10℃ - +50℃					

M.O.D : Minimum Object Distance
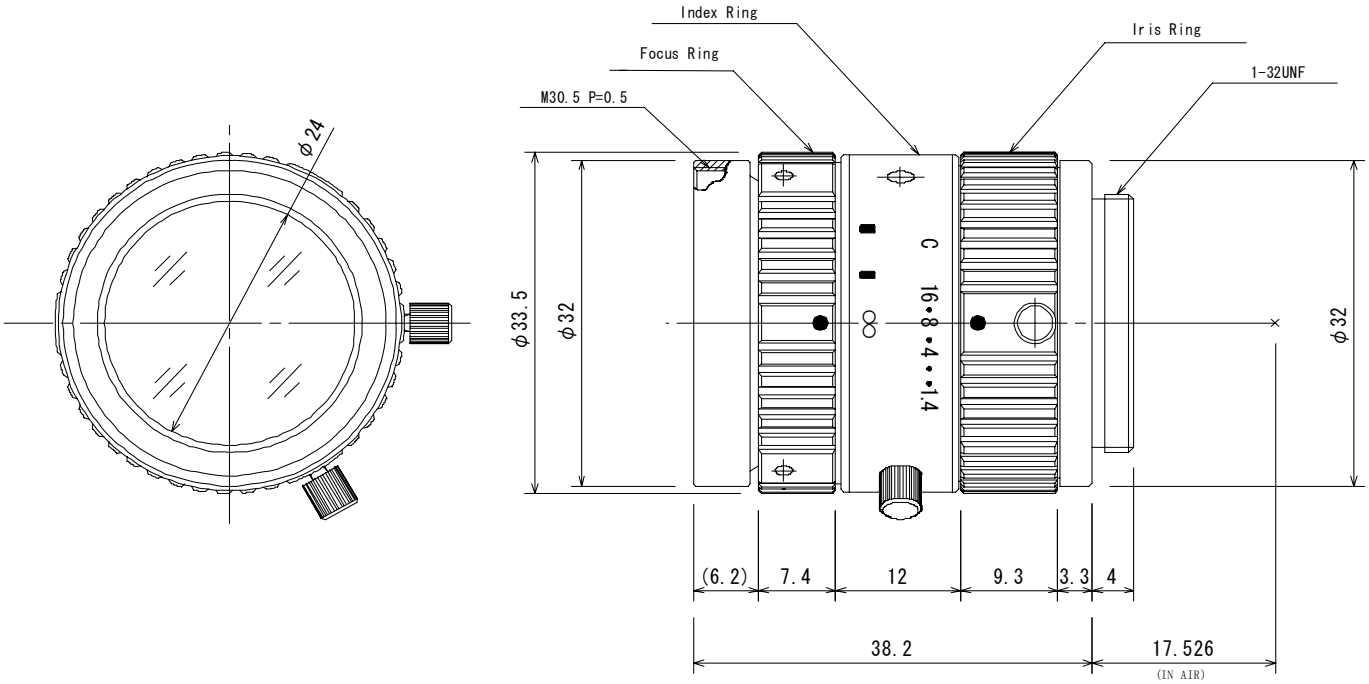
Dimensions